Your PDF Guides

You can read the recommendations in the user guide, the technical guide or the installation guide for ICOM HM-133. You'll find the answers to all your questions on the ICOM HM-133 in the user manual (information, specifications, safety advice, size, accessories, etc.). Detailed instructions for use are in the User's Guide.

User manual ICOM HM-133
User guide ICOM HM-133
Operating instructions ICOM HM-133
Instructions for use ICOM HM-133
Instruction manual ICOM HM-133

SECTION 11 HM-133

• ELECTRICAL PARTS

[MAIN-A UNIT]

REF NO.	ORDER NO.	DESCRIPTION	M.	HV LOCATION
IC1	1140011491	SIC μPD78F0947-041-9A-4-E1-A	B	51.1/24.5
IC3	1110006210	SIC BD3245-3R	B	67.3/34.8
IC6	1130012036	SIC BR24L02FV-WE2	B	39.4/30.1
Q1	1530001941	STR 2SC2712-BL (TE85L,F)	B	26.1/1.1
Q2	1590000880	STR DTC114EUA T106	B	21.6/34.8
Q3	1590001330	STR DTA114EUA T106	B	24.7/34.8
Q4	1510000771	STR 2SA1586-GR (TE85R,F)	B	54.7/34.9
Q5	1510000771	STR 2SA1586-GR (TE85R,F)	B	54.5/32.5
Q6	1510000771	STR 2SA1586-GR (TE85R,F)	B	48.5/5.8
Q7	1510000771	STR 2SA1586-GR (TE85R,F)	B	48.5/5.3
Q8	1530001941	STR 2SC2712-BL (TE85L,F)	B	19.5/9.9
Q9	1590001010	STR DTB113ZK T146	B	22.8/1.1
D1	1790003950	SZEN MA8056-M (TX)	B	23.1/1.7
D3	1750003940	SDIO ISS400 TE85	B	64.7/23.2
D4	1750003940	SDIO ISS400 TE85	B	64.7/29.2
D5	1750003940	SDIO ISS400 TE85	B	59.6/25.5
D6	1750003940	SDIO ISS400 TE85	B	58.7/26.8
D7	1750003940	SDIO ISS400 TE85	B	42.8/16.7
D9	1750003940	SDIO ISS400 TE85	B	34.1/16.3
D10	1750003940	SDIO ISS400 TE85	B	54.9/17.8
D11	1750003940	SDIO ISS400 TE85	B	38.8/14.5
D12	1750003940	SDIO ISS400 TE85	B	5.7/22.9
D16	1730002380	SZEN MA8014-M (TX)	B	55.8/14.5
D17	1730002380	SZEN MA8014-M (TX)	B	48.8/14.5
D18	1730002380	SZEN MA8014-M (TX)	B	12.5/13.9
X1	6060000610	SCER EFOS4914E3	B	42.6/22.3
L1	6200001520	SCOL MLF3216D R68K-T	B	1/28.9
L2	6200001520	SCOL MLF3216D R68K-T	B	10.7/13.9
R2	7030000400	SRES MCR10EZHJ1.5 k	B	24.2/8.3
R3	7030000400	SRES MCR10EZHJ1.5 k	B	41.9/8.3
R4	7030000400	SRES MCR10EZHJ1.5 k	B	57.3/8.2
R5	7030003400	SRES ERJ6GEYJ471 V (470)	B	28.6/11.2
R6	7030003420	SRES ERJ6GEYJ333 V (33 k)	B	26.8/34.7
R7	7030003420	SRES ERJ6GEYJ333 V (33 k)	B	23.3/36.8
R8	7030003570	SRES ERJ6GEYJ123 V (12 k)	B	19.1/33.7
R9	7030003560	SRES ERJ6GEYJ103 V (10 k)	B	57.6/35.6
R10	7030003440	SRES ERJ6GEYJ152 V (1.5 k)	B	57.6/34.3
R11	7030003480	SRES ERJ6GEYJ222 V (2.2 k)	B	57.6/36.9
R12	7030003560	SRES ERJ6GEYJ103 V (10 k)	B	60.4/37.2
R13	7030003560	SRES ERJ6GEYJ103 V (10 k)	B	46.7/5.5
R14	7030003420	SRES ERJ6GEYJ681 V (680)	B	51.5/5.9
R14	7030003440	SRES ERJ6GEYJ152 V (1.5 k)	B	51.5/5.9
R15	7030003420	SRES ERJ6GEYJ471 V (470)	B	51.5/3.3
R15	7030003480	SRES ERJ6GEYJ222 V (2.2 k)	B	51.5/3.3
R18	7030003560	SRES ERJ6GEYJ103 V (10 k)	B	45.7/4.2
R18	7030003560	SRES ERJ6GEYJ103 V (10 k)	B	41.6/33.6
R19	7030003640	SRES ERJ6GEYJ473 V (47 k)	B	38.4/34.5
R22	7030003520	SRES ERJ6GEYJ472 V (4.7 k)	B	37.9/18.7
R22	7030003520	SRES ERJ6GEYJ472 V (4.7 k)	B	56.7/18.7
R24	7030003520	SRES ERJ6GEYJ472 V (4.7 k)	B	58/18.6
R25	7030003520	SRES ERJ6GEYJ472 V (4.7 k)	B	59.8/18.9
R27	7030003560	SRES ERJ6GEYJ103 V (10 k)	B	68.1/32.5
R35	7030000400	SRES MCR10EZHJ1.5 k	B	69.7/11.9
R36	7030003560	SRES ERJ6GEYJ103 V (10 k)	B	20.5/30.6
R37	7030003440	SRES ERJ6GEYJ152 V (1.5 k)	B	19.7/30.6
R38	7030003700	SRES ERJ6GEYJ224 V (220 k)	B	17.5/7.7
R39	7030003480	SRES ERJ6GEYJ222 V (2.2 k)	B	24.4/5.7
R40	7030003480	SRES ERJ6GEYJ222 V (2.2 k)	B	24.4/3
R41	7030003560	SRES ERJ6GEYJ103 V (10 k)	B	1.7/33.7
R42	7030003620	SRES ERJ6GE JPW V	B	68.4/21.6
R43	7030003440	SRES ERJ6GEYJ152 V (1.5 k)	B	57.4/27.5
R44	7030003440	SRES ERJ6GEYJ152 V (1.5 k)	B	57.3/22.1
R45	7030003440	SRES ERJ6GEYJ152 V (1.5 k)	B	53.9/1.8
R46	7030003440	SRES ERJ6GEYJ152 V (1.5 k)	B	37.8/15.8
R47	7030003440	SRES ERJ6GEYJ152 V (1.5 k)	B	37.8/17.7
R48	7030003440	SRES ERJ6GEYJ152 V (1.5 k)	B	45.3/17.6
R49	7030003440	SRES ERJ6GEYJ152 V (1.5 k)	B	57.3/26.2
R50	7030003440	SRES ERJ6GEYJ152 V (1.5 k)	B	38.1/23.4
R51	7030003440	SRES ERJ6GEYJ152 V (1.5 k)	B	57.4/24.7
C1	4030008850	SCER C1608JB 1H 474K-T	B	52/16.9
C2	4510008500	SELE EEE1CA101WP	B	35.5/5.9
C8	4030007250	SCER C1608CH 1H 220J-T	B	14.9/30.4
C9	4030007250	SCER C1608CH 1H 220J-T	B	16.3/16.9
C10	4030007250	SCER C1608CH 1H 220J-T	B	15.6/15.3
C11	4030007250	SCER C1608CH 1H 220J-T	B	15.6/7.2
C12	4030006860	SCER C1608JB 1H 103K-T	B	64.9/24.4
C13	4030006860	SCER C1608JB 1H 103K-T	B	44.3/27.6
C14	4030006860	SCER C1608JB 1H 103K-T	B	67.5/37.2
C15	4030006860	SCER C1608JB 1H 103K-T	B	41.9/28.7
C16	4030006860	SCER C1608JB 1H 103K-T	B	14.7/13.6
C17	4030006860	SCER C1608JB 1H 103K-T	B	11.7/17.4
C18	4030006860	SCER C1608JB 1H 103K-T	B	10.4/17.4
C19	4030006860	SCER C1608JB 1H 103K-T	B	13/35.8
C21	4030006860	SCER C1608JB 1H 103K-T	B	11.7/25.8

[MAIN UNIT]

REF NO.	ORDER NO.	DESCRIPTION	M.	HV LOCATION
C22	4030008860	S CER C1608JB 1H 103K-T	B	10.4/25.5
C23	4030008860	S CER C1608JB 1H 103K-T	B	23.1/14.1
C24	4030008860	S CER C1608JB 1H 103K-T	B	67.2/12.1
C25	4030008860	S CER C1608JB 1H 103K-T	B	25.6/22.2
C26	4030008860	S CER C1608JB 1H 103K-T	B	53/4.6
C27	4030008860	S CER C1608JB 1H 103K-T	B	60.9/25.9
C29	4510008540	S ELE EEE 1CA 100SR	B	26.4/16
C30	4030011560	S CER C1608JB 1E 104K-T	B	2/3.3
C31	4510008540	S ELE EEE 1CA 100SR	B	28.3/4.9
J1	6510023110	CNR 3030L-8P8C -P6N-		
DS1	5010000120	S LED LN1371G-(TR)	T	21.9/11
DS2	5010000120	S LED LN1371G-(TR)	T	21.9/32
DS3	5010000120	S LED LN1371G-(TR)	T	39.3/11
DS4	5010000120	S LED LN1371G-(TR)	T	39.3/32
DS5	5010000120	S LED LN1371G-(TR)	T	55.9/2.5
DS6	5010000120	S LED LN1371G-(TR)	T	56.2/26.8
DS7	5010000120	S LED LN1371G-(TR)	T	71.7/14.8
DS8	5010000120	S LED LN1371G-(TR)	T	72.2/33.8
DS10	5010000150	S LED LT1E/P53A	T	51.6/5
DS10	5040003160	S LED BRPY0211C-TR	T	51.6/5
DS11	5010000150	S LED LT1E/P53A	T	51.6/38
DS11	5040003160	S LED BRPY0211C-TR	T	51.6/38
MC1	7700003310	MIC EM-140		
S1	2260003080	S W S6HHLP01-4A		
EP1	6910012350	S BEA MMZ1608Y 102BT	B	10.4/25.8
EP2	6910012350	S BEA MMZ1608Y 102BT	B	14.3/17.4
EP3	6910012350	S BEA MMZ1608Y 102BT	B	13/17.4
EP4	6910012350	S BEA MMZ1608Y 102BT	B	14/3.11

M: •Mounted side (T: Mounted on the Top side, B: Mounted on the Bottom side)
S: •Surface mount

• MECHANICAL PARTS

[CHASSIS PARTS]

REF NO.	ORDER NO.	DESCRIPTION	QTY.
W1	8900011271	CPC-1153A	1
MP1	8210018830	25.9 FRONT PANEL	1
MP2	8210018840	25.9 REAR PANEL	1
MP3	8930057360	25.9 P.TT BUTTON	1
MP4	8930057390	25.9 LED LENS	2
MP5	8930057570	25.9 S W RUBBER	1
MP6	8930057520	25.9 KEYSCANRC	1
MP8	8810000071	Screw BT B0.3X12N-ZK3 (ST)	4
MP9	8810000090	Screw BT B0.2X6 Ni-ZK3 (ST)	3

[MAIN-A UNIT]

REF NO.	ORDER NO.	DESCRIPTION	QTY.
J1	6510023110	3030L-8P8C	1
MC1	7700003310	EM-140	1
S1	2260003080	S6HHLP01-4A	1

• DIMENTIONS

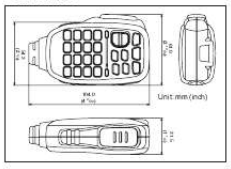

• EXPLODED VIEW

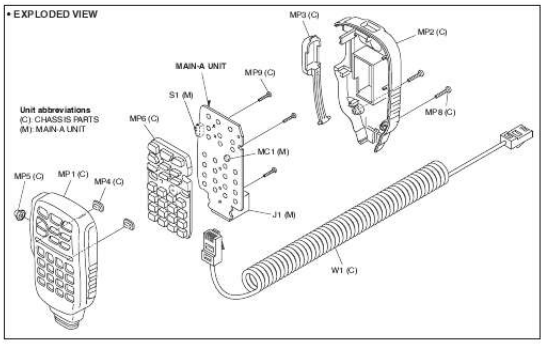

• VOLTAGE DIAGRAM

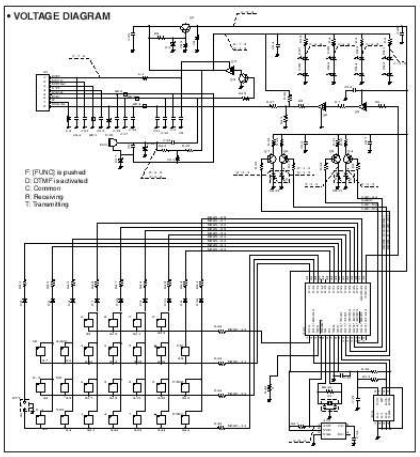

You're reading an excerpt. Click here to read official ICOM HM-133 user guide
http://yourpdfguides.com/dref/2445030

Manual abstract:

IC1 IC3 IC6 Q1 Q2 Q3 Q4 Q5 Q6 Q7 Q8 Q9 D1 D3 D4 D5 D6 D7 D9 D10 D11 D12 D16 D17 D18 X1 L1 L2 R2 R3 R4 R5 R6 R7 R8 R9 R10 R11 R12 R13 R14 R14 R15 R15 R16 R18 R19 R22 R23 R24 R25 R27 R35 R36 R37 R38 R39 R40 R41 R42 R43 R44 R45 R46 R47 R48 R49 R50 R51 C1 C2 C5 C9 C10 C11 C12 C13 C14 C15 C16 C17 C18 C19 C21 HM-133 [MAIN UNIT] · EXPLODED VIEW MP3 (C) MP2 (C) MAIN-A UNIT DESCRIPTION S.CER S.CER S.CER S.CER S.CER S.CER S.ELE S.CER S.ELE C1608 JB 1H 102K-T C1608 JB 1H 102K-T C1608 JB 1H 102K-T C1608 JB 1H 102K-T C1608 JB 1H 102K-T C1608 JB 1H 102K-T EEE1CA100SR C1608 JB 1E 104K-T EEE1CA100SR 3008L-8P8C <KIN> LN1371G-(TR) LN1371G-(TR) LN1371G-(TR) LN1371G-(TR) LN1371G-(TR) LN1371G-(TR) LN1371G-(TR) LN1371G-(TR) LT1EP53A BRPY1211C-TR LT1EP53A BRPY1211C-TR EM-140 SKHHLP014A MMZ1608Y 102BT MMZ1608Y 102BT MMZ1608Y 102BT MMZ1608Y 102BT B B B B 10.
4/25.8 14.3/17.4 13/17.4 14.
5/11 T T T T T T T T T T T T 21.9/11 21.9/32 39.3/11 39.3/32 55.
9/2.5 56.2/26.8 71.7/14.8 72.2/33.8 51.6/5 51.6/5 51.

6/38 51.6/38 ORDER NO. 1140011491 S.IC 1110006310 S.IC 1130012030 S.IC 1530001941 1590000680 1590001330 1510000771 1510000771 1510000771 1510000771 1530001941 1590001010 1790000950 1750000940 1750000940 1750000940 1750000940 1750000940 1750000940 1750000940 1750000940 1750000940 1730002280 1730002280 1730002280 S.TR S.TR S.TR S.TR S.
TR S.TR S.TR S.TR S.TR S.
ZEN S.DIO S.DIO S.DIO S.DIO S.
DIO S.DIO S.DIO S.DIO S.DIO S.ZEN S.ZEN S.ZEN DESCRIPTION uPD789071MC-041-5A4-E1-A BD5245G-TR BR24L02FV-WE2 2SC2712-BL (TE85L,F) DTC114EUA T106 DTA114EUA T106 2SA1586-GR (TE85R,F) 2SA1586-GR (TE85R,F) 2SA1586-GR (TE85R,F) 2SA1586-GR (TE85R,F) 2SC2712-BL (TE85L,F) DTB113ZK T146 MA8056-M (TX) ISS400 TE61 ISS400 TE61 ISS400 TE61 ISS400 TE61 ISS400 TE61 ISS400 TE61 ISS400 TE61 ISS400 TE61 MA8091-M (TX) MA8091-M (TX) MA8091-M (TX) H/V M. .

You're reading an excerpt. Click here to read official ICOM HM-133 user guide
http://yourpdfguides.com/dref/2445030